LGA Module 112Pin

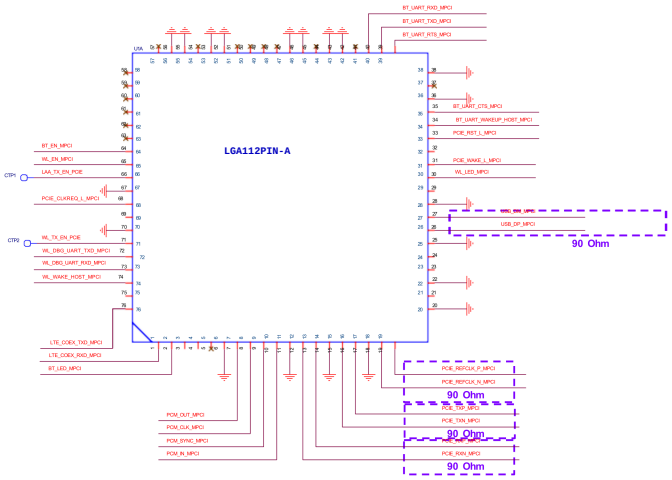

Mini PCIe

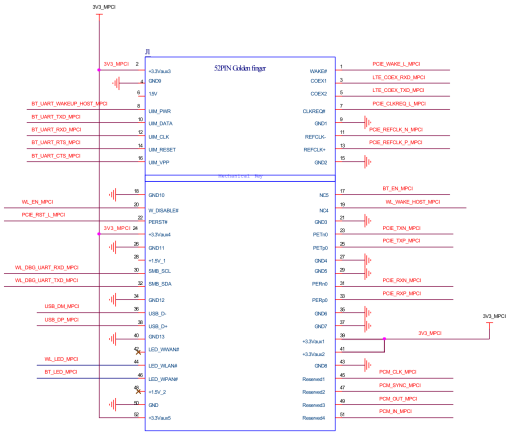

PTH

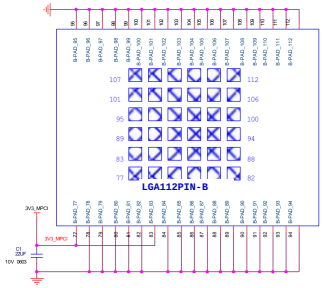

PART NUMBER	DESCRIPTION
AXX-QCA206X-XXXX	E20 Series X, Mini PCI Express Carrier Schematic

TECH DESIGN VOXMICRO

Copyright © All Rights Reserved - VoxMicro LTD Group www.voxmicro.com - www.voxmicro.tel

DRAWING NUMBER	FINISH by	APVD by	MATERIAL by	UNITS in	DIMENSION	SIZE	SCALE	SHEET
AEBPO-130003- 01	Andy	LT		mm	1PCL ±0.5 ANGLES ±5°	A4	1:1	1 OF 1

RELEASE	Zone	NOTES	DRAWN	CHECKED	DATE
1	1	Initial Release	AC	LT	2023-03-07

CONFIDENTIAL AND PROPRIETARY - VOXMICRO, LTD. : NOT TO BE USED, COPIED, REPRODUCED, OR MODIFIED IN WHOLE OR IN PART, NOR ITS CONTENTS REVEALED IN ANY MANNER TO OTHERS WITHOUT THE EXPRESS WRITTEN PERMISSION OF VOXMICRO, LTD.

THIS TECHNICAL DATA MAY BE SUBJECT TO U.S. AND INTERNATIONAL EXPORT, RE-EXPORT OR TRANSFER ("EXPORT") LAWS. DIVERSION CONTRARY TO U.S. AND INTERNATIONAL LAW IS STRICTLY PROHIBITED.

AIRETOS ® AND OxfordTEC ® ARE REGISTERED TRADEMARKS OF VOXMICRO, LTD. ALL OTHER REGISTERED AND UNREGISTERED TRADEMARKS ARE THE PROPERTY OF VOXMICRO LTD GROUP OR THEIR RESPECTIVE OWNERS.